RXP 81: Pneumatic master controller

For centralised setpoint correction and (with the TWUP 210 transducer) for setpoint shift (dependent on the outside temperature) of max. 50 pem pneumatic temperature controllers with `fixed-value + schedule' function (e.g. TSFP, TKFP). Used in conjunction with a time-switch and a solenoid valve, it provides centrally-controlled setpoint reduction (night setback). Conforms to the regulations on pressure equipment (97/23/EG Art. 3.3).
Housing 144 × 144 mm of thermoplastic; front plate with four adjusters, two manometers for indicating the outside temperature and the current setpoint shift in °C. Suitable for either panel or wall mounting. Compressed-air connection Rp ⅛ with female thread.

Type	Correction zero	Maximum shift	Air capacity l_n/h	Weight kg
RXP 81 F001	± 0...2 K	± 6 K	400	0.75

Supply pressure [1]	1.3 bar ± 0.1		Slope S	0.14...2 K/K
			Shift starting point FF	–20...40 °C
Input pressure w1	0.2...1.0 bar, (–20...40 °C)		Permissible amb.t temp.	0...55 °C
Output pressure affecting the controller setpoint:				
fixed-value control	0.6 bar	0 K	Connection diagram	A02107
schedule control	0.6...1.2 bar	+6 K	Dimension drawing	M297100
setpoint reduction	0.6...0 bar	–6 K	Fitting instructions	MV 3257

[1] See Section 60 on regulations concerning the quality of supply air, especially at low ambient temperatures.

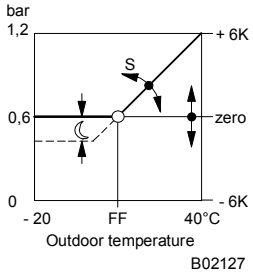

Operation

This is divided into several separate functions as detailed below.

Fixed-value control

In this operating state, the master relay has an output pressure of 0.6 bar. The temperature controllers regulate to the scale value (X_s) that has been set.

Using the 'zero' adjuster, these setpoints can be corrected centrally by ± 2°C as required.

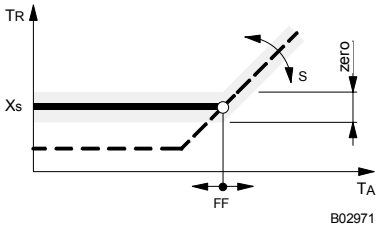

Schedule control (setpoint shift)

If the outside temperature exceeds the variable shift starting point (FF), then the master relay allows a pressure of between 0.6 and 1.2 bar. This pressure is the input pressure for the temperature controllers, the setpoint of which is raised in accordance with the set slope S.

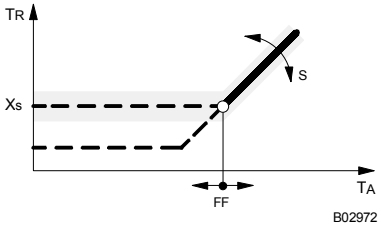

Setpoint reduction (e.g. night setback)
When connection no. 6 is opened via an electro-pneumatic relay, the pressure controlled by the master relay falls by 0.6...0 bar. This pressure is the input pressure for the temperature controllers, the setpoint of which is lowered in accordance with the setpoint reduction level set at the ☾ adjuster.

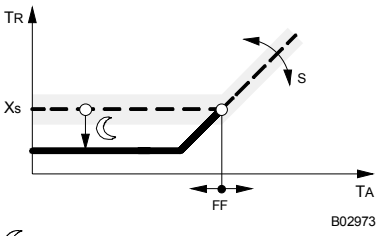

☾ = setpoint reduction

Installation is much simpler if not all of the functions are needed.

Fixed-value + schedule control only (with setpoint shift)
Connection 6 remains open. Setpoint reduction at the ☾ adjuster is at zero. This function is identical to that described under *Schedule control above*.

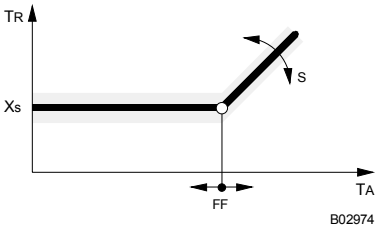

Fixed-value control only, with setpoint reduction (e.g. night setback)
Connection 4 remains open. The position of the adjusters for FF and S are irrelevant. This function is identical to that described under *Setpoint reduction above*.

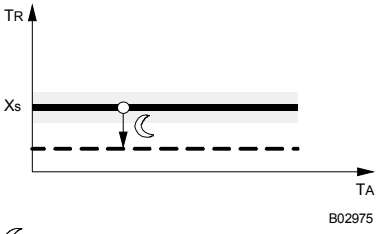

☾ = setpoint reduction

Fixed-value control only, with setpoint increase (e.g. night increase)
Connection 4 remains open. The position of the adjusters for FF and S are irrelevant. When connection no. 6 is opened via an electro-pneumatic relay, the pressure controlled by the master relay rises by 0.6...0 bar. This pressure is the input pressure for the temperature controllers, the setpoint of which is elevated in accordance with the level set at the ☾ adjuster.

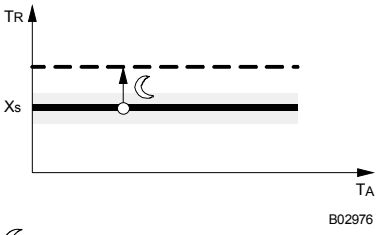

☾ = setpoint elevation

Key

S	= slope, setpoint shift
FF	= shift starting point, setpoint of the master relay
X_S	= setpoint of the temperature controller
T_A	= outside temperature
T_R	= room temperature

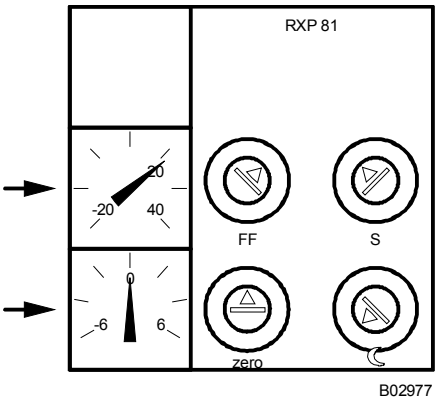

Manometer display

- The temperature of the outside-temperature transducer is shown on the –20 to +40 °C manometer

- The –6 to +6 °C manometer has multiple functions:-
  (a) Fixed-value control: shows the central ‘zero' room-temperature correction.
  (b) Schedule control: shows the room-temperature shift.
  (c) Reduced operation: shows the room-temperature setback for heating, or the room-temperature elevation for cooling.

Additional information on equipment

Card insert with *Centair* components; integrated throttle (restrictor) of 0.2 mm diameter in connection no. 4 for the air supply of the outside-temperature transducer; front door of transparent plastic.

Connection diagram

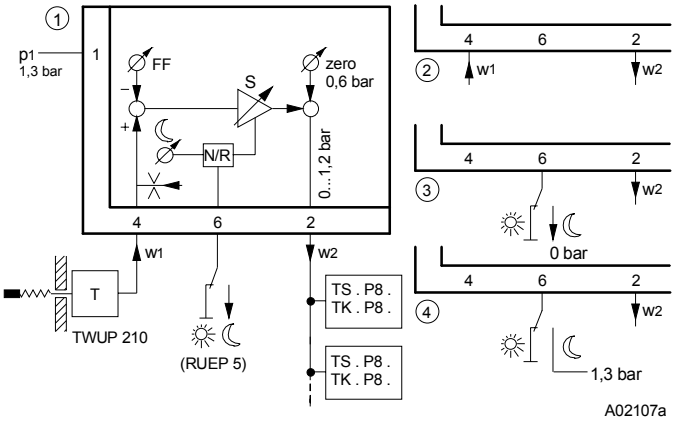

Key

1	Fixed-value + schedule control, N/R = decrease
2	Fixed-value + schedule control, without N/R
3	Fixed-value control, N/R = setback
4	Fixed-value control, N/R = elevation
N/R	external change-over ‘normal/reduced'
FF	shift starting point

Dimension drawing

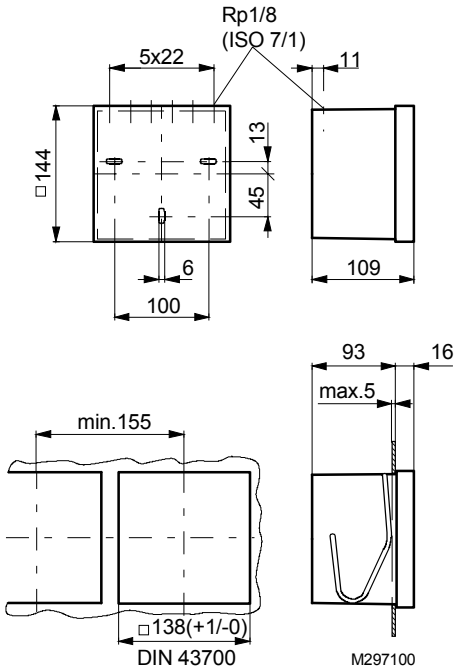

Example of use

- Addition of a command variable (outside temperature) to several room-temperature controllers of type TSFP 80,81 or duct-temperature controllers of type TFK 81.